Operating Instructions – BED TURNER



CE

Table of contents.

1. Introduction. 3
2. Unpacking. 3
3. General precautions. 4
4. Scope. 5
5. Lifespan of the product. 5
6. Equipment and accessories. 5
7. Unpacking. 5
8. Connecting to Power. 5
9. Charging the batteries (only for models with battery). 6
10. Electric operation. 6
11. Operation of Beds Turner. 7
12. Good advice when lifting a bed. 7
13. Technical specifications. 8
14. Cleaning 9
15. Maintenance 9
16. Service. 9
17. Transport and storage: 10
18. Disposal: 10
19. Electromagnetic – EMC Impact 10
20. Warranty. 11
21. Symbol explanation 12
Appendix A (Informative) Periodic Inspection 13
Appendix B Instructions for daily inspection of the Bed Turner before use 14
Appendix C Guidelines 12 months' inspection of the Bed Turner: 15
Annex D Dimensions 17
Annex E Spare parts list 18
Appendix F TROUBLESHOOTING. 19
SURCHARGE – BATTERY. 20

1. Introduction.

Rehab-Care ApS congratulates you on their new equipment.
Rehab-Care beds and lifts are a modern and up-to-date product based on our many years of experience in the field. This equipment makes it possible to increase functionality, quality and handling at the same time, and is thus an optimal solution.
Through continuous development and in all phases of our manufacturing process, we strive for care and quality awareness, and Rehab-Care therefore stands as a guarantee for a very reliable and functional product that is top notch in terms of quality. Customer satisfaction is the primary goal of our product development.

Bed turners meet the requirements of the Machinery Directive 2006/42/EEC as amended, as well as the following product standards, EN 61000-6-3 Electromagnetic compatibility (EMC), EN 60601-1 Electrical safety medical devices.

Thank you for your trust in our products and for good cooperation. We wish you all the best with your new equipment.

Regards.
Rehab-Care ApS.

Version 02 -26.02.2026

Manufacturer:



Rehab- Care.dk ApS
Avnvej 10
7400 Herning, DK

Agent:

2. Unpacking.

Unpack the Bed Turner carefully. Check that all parts including accessories are included.

Inspect the bed turner for any transport damage.
Contact your dealer or manufacturer if the Bed Turner is damaged or malfunctions.

3. General precautions.

⚠ Attention! Never spray directly onto the product with a pressure washer.

⚠ Attention! Do not use chemicals that are not approved and carry out annual service inspections for damage and use.

⚠ Attention! Do not use any hand controls other than the one supplied with the product.

⚠ Attention! Foreign objects entering the tread can destroy/damage the bearing wheels.

⚠ Attention! Do not install any wheels other than those recommended by the manufacturer.

⚠ Attention! Maximum permissible working load is 220 **kg.**

⚠ Attention! It is forbidden to hoist or lift people

⚠ Attention! Check that the bed is correctly fastened before lifting it

⚠ Attention! Bed turners must not be used if there is suspicion of the functions of the equipment

⚠ Attention! Bed turners are NOT approved for use in private homes.

⚠ Attention! Bed turners may not be used by people under 18 years of age

⚠ Attention! Batteries must be disposed of in accordance with national legislation (for products with battery)

⚠ Attention! Improper use of power cables, power supply, hand control, or mechanical damage to the Turner, can cause a risk of incidents.

⚠ Attention! Be aware that wires do not get pinched.

⚠ Attention! Do not lift the bed without a mattress on top of the lying surface.

⚠ Attention! Bed swipes must not be stacked on top of each other.

⚠ Attention! The use of accessories other than those specified by the manufacturer may result in non-compliance with CE approval, increased emission or change in electrical safety.

Variants:
Bed turner is sold in two variants. One with battery function and one without.
In this user manual, both variants will be discussed, therefore pay attention to whether the product in question is with or without battery function.

B **Items in the user manual that are specifically relevant to the battery variant are marked with the following symbol on the far-left side of the text.**

NOTE! Before use.
To avoid injuries in connection with the handling and use of the product, these operating instructions must be read and understood before using the product.

4. Scope.

Bed turners are designed for lifting beds, so that cleaning and maintenance of hospital/nursing beds is facilitated, accessibility is increased, and better working postures are possible.

The bed turner is intended for indoor use.

⚠ Attention! Bed turners have not been tested and evaluated in relation to use in private homes, therefore do not use the product in private homes.

⚠ Attention! Bed turners may not be used by people under 18 years of age

⚠ Attention! Maximum permissible working load **is 220 kg**. Not to be exceeded

5. Lifespan of the product.

The product has a life expectancy of 10 years.
Lifespan is based on proper use, cleaning, service and maintenance.

Products used beyond the above service life must be evaluated by qualified service personnel for future use.

It is the responsibility of users to continuously assess whether the product can be used beyond the specified lifetime.

Electrical parts must only be serviced by trained technicians.

6. Equipment and accessories

The bed turner consists of:

- Electric hand control
- Cord for connection to power outlet

The purchase of a battery is an option.

7. Unpacking.

After receipt, the Bed Turner is unpacked and it is checked that all parts, including any purchased accessories, are included.

Inspect the bed turner for any transport damage.
Contact dealer or manufacturer if promises are damaged or not working.

8. Connecting to Power.

After unpacking, connect the head cable of the bed to a mains socket.

Bed Turner is equipped with transformer 230V DC.



B Model with battery function. When connecting, check all battery functions. In case of defects or defects or missing parts, contact the supplier as soon as possible and before use.

When the charger is not in use, wind up the cord.

⚠ When connecting, check cables for breaks or cracks on the wire

⚠ If the power to the bed needs to be disconnected, remove the plug from the socket

B 9. Charging the batteries (only for models with battery)

To ensure the longest possible life of your battery box, it must be charged before use.
Charging times depend on the condition of the battery.

Before using the Bed turner for the first time, the battery is charged **for 24 hours,**
to ensure that it is fully charged and to ensure the best possible battery life.

Subsequently, batteries have a charging time of **4 hours**.

See also the instructions regarding battery in APPENDIX – BATTERY at the end of this manual.

10. Electric operation.



Setting the Bed Turner is done with the electric hand control.

The setting is shown on the pictograms on the hand control.

When pressing up, move the bed turner arms up until horizontal, by continuing to press the up button, then move the arms up into a vertical position.

When pressing down, arms first move in a horizontal position, when pressing the button continuously, run arms downwards horizontally.

⚠ It is forbidden to hoist or lift persons.

⚠ Maximum permissible working load **220 kg**. Do not exceed.

⚠ Check that there is free space above the beds facing before it is rolled up.

⚠ The bed must be able to move freely and effortlessly up and down.

⚠ Check that the cable for the remote control is in good condition, and without cracks or damage.

11. Operation of Beds Turner.

Adjustment and adaptation to bed to be turned. Width (bed) 69 – 100 cm
Height (bed) 44-60 cm Max load 220 kg
Net weight 80 kg.

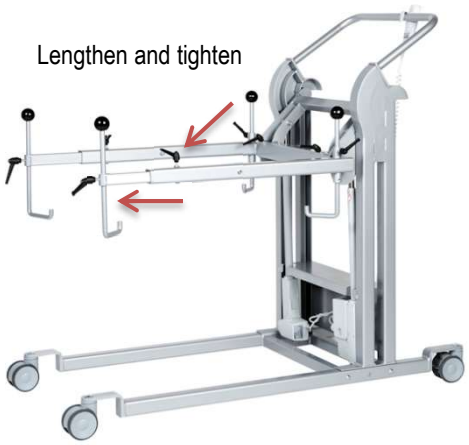





Be careful not to accidentally pinch wires or the bed's hand control. Never lift a bed without a mattress on top of the lying surface
Loosen the Turner's wheel.



Fully raised bed.

Service, cleaning and maintenance possible

12. Good advice when lifting a bed.

1. Remove loose objects from bed
2. Drive bed down to the lowest height
3. Check that the bed rails are removed, or fastened so that they cannot tip off
4. Attach hand control so that it does not fall off when the bed is turned over
5. Check that the mattress is in the right position. DO NOT lift the bed without a mattress on top of the lying surface.
6. Ensure that the bed is placed approximately in the middle of the bed turner, so that weight is as evenly distributed as possible

1. Adjust the fixed brackets to fit the bed in question. Check that this does not get cables pinched.
2. After tightening all adjustment levers on the bed turner
3. Lock wheels on bed turner
4. Gently lift the bed slightly using hand control
5. Check that the bed is fastened correctly/securely
6. Always stand behind the bed turner when operating the
7. Continue to lift/flip the bed
8. Do not ride with bed in an upright position while lifting on bed turner. Lack of visibility and instability pose a risk and can result in accidents.
9. Do not leave the bed turner in position with the bed in the raised position where it is accessible to unauthorized persons
10. Always check the maximum lifting height and ceiling height before a lift is made
11. Bed turner can perform approx. 10 lifts if the battery is fully charged (model with battery)
12. After using it, lower the bed to the floor. Release the fixed bracket and lower the lower lift arm and drive the bed turner away from the bed.

13. Technical specifications.

Length	1,300 mm
Wide	700 mm
Brake wheels	100 mm
Weight	80 kg
Power supply	230V – 50Hz
IP class	IP x6
Cable length	3.9 m
Lowest lifting height	440 mm
Highest lifting height	600 mm
Minimum beds wide	690 mm
Maximum beds wide	1,020 mm
Maximum Lifting Capacity	**220 kg**

Brake function on rear wheels

14. Cleaning

Check that all cables and connectors are well and correctly inserted before cleaning to prevent water ingress. The bed turner is cleaned with cleaning or disinfecting agent, using a brush or sponge, which is subsequently showered or rinsed. Water must be a maximum of 20 degrees C, where this comes into contact with electronics. Dry thoroughly after washing.

Solvents in highly concentrated form must not be used.

Do not use 100% chlorine solutions.

The bed turner does not **tolerate autoclaving.**

When cleaning wheels, they only use cleaning agents that do not contain corrosion-promoting and harmful substances.

 Attention! Never spray directly onto the product with a pressure washer.

 Attention! Cleaning with steam is not allowed.

 Attention! Not machine washable.

15. Maintenance

Wheels are kept free of hair and dirt.

Annual check-ups are recommended.

Moving parts are checked, tightened and lubricated.

Worn bearings are replaced.

B Battery is replaced as needed. (only for models with battery) See also the instructions regarding battery maintenance in the APPENDIX – BATTERY at the end of this manual.

16. Service.

It is recommended that Bed turners undergo an annual service inspection, which is carried out by qualified staff. It is the owner of Bed turner who must ensure that the service inspection is carried out. A service protocol must be created for the controlled Bed turner. The protocol must be signed by the customer after each inspection.
If the service technician discovers a serious fault on the Bed turner, he is obliged to ensure that the Bed turner is taken out of use if the fault involves a safety risk

Service, repairs and other extraordinary work on the lift between service inspections must be noted on the service record.

16.1 Service - ACTUATORS.

Actuators/lift motor must be replaced after 11,000 cycles or min every 5 years
Replacement of actuators must only be performed by authorized service personnel.

16.2 Service – WHEELS

Wheels must be serviced regularly as needed:

- retightening of bolts and shafts

Closed dustproof bearings. Lubrication is not applicable.

Only cleaning agents that do not contain corrosion-promoting and harmful substances may be used. Wheels and parts must be replaced as soon as malfunctions occur.

B **16.3 Service – BATTERY (for models with battery only)**
If the Bedside Turner does not work as normal and the batteries are fully charged, it may be because the life of the battery has been exceeded and must therefore be replaced. Replacement may only be carried out by competent personnel. Use only original spare parts
See also the instructions for battery maintenance in the APPENDIX – BATTERY at the end of this manual.

17. Transport and storage:

If the Bed Turner is not to be used for a long time, it is recommended that the bed is covered so that it is protected from dust and dirt.

B If the Bedside Turner is not used for a long time, remove the battery, as the life of the batteries is greatly reduced if they are completely discharged. (only for models with battery)

Bed turners should be stored frost-free and not above normal humidity (approx. 80%)

Requirements in connection with storage and transport:

1. humidity between 10 and 80%
2. temperature between -30 and 40 degrees C.'
3. Pressure between 700 – 1100 hPa

18. Disposal:

When disposed of, the Bedside Turner is separated into electronic waste and metal waste. Electronic waste must be disposed of according to current regulations. Do not dispose of with domestic waste.

B Battery must be disposed of in accordance with applicable battery regulations.

19. Electromagnetic – EMC Impact

Portable and mobile RF communication equipment (for example, mobile phones) can affect electrical medical equipment.

Use of accessories and cables other than those specified may result in increased emission or reduced immunity of the device.

Electricity supply via grid power must be of the quality that is normal in commercial and hospital environments.

20. Warranty.

According to the Sale of Goods Act, there is a 2-year warranty on the Bed turner.
The warranty will lapse in the following cases:

1. Overload of the Bed Turner.
2. Heavy use of Bed turner.
3. Operating error, incorrect use of the Bed turner.
4. Lack of or improper maintenance.
5. if electrical LINAK parts are opened or have been used incorrectly.
6. The warranty is limited to the value of REHAB Care ApS. Product

At Rehab-Care, we strive to continuously improve the products.
We therefore reserve the right to change the products without prior notice.
All measurements stated on sketches or other material are only indicative and are subject to errors and omissions.

21. Symbol explanation

The following symbols are used on the label and/or in these operating instructions:



Warning, see associated documents



User Information

IP66 CO71 Water jets
(Powerful water jets (12.5 mm nozzle) towards the enclosure from any direction must not have any harmful effect.) Max 20 degrees C



Class 2, Without Ground Connection



Type B equipment (EN 60601-1)



For indoor use



CE approval Machinery Directive 2006/42/EC as amended.

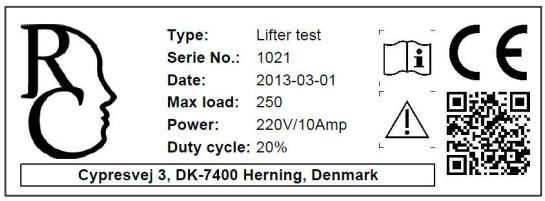

Maximum Allowable Workload 220 kg.	It is forbidden to hoist or lift persons

Appendix A (Informative) Periodic Inspection

Periodic inspections

A.1 Periodic inspections of the Bed Turner should be carried out at time intervals specified by the manufacturer, but at least once a year. Periodic inspections are a visual examination, of the product's load-bearing structure, lifting, brakes, controls, and safety devices, as well as functional tests and necessary maintenance measures, e.g. adjustment of brakes, tightening of screws, etc.

Each inspection must include a test of one (1) lifting cycle with the maximum load.

A.2 Periodic inspections must be carried out by a person who is suitable and properly qualified and has knowledge of the construction, use and maintenance of the Bed turner.

A.3 All observations of importance to the safety of the Bed turner must be noted, preferably in a logbook, which must be kept by the person(s) responsible for servicing/maintaining the Bed Turner

The date on which action is taken in response to observations observed should also be noted on the table.

A.4 A record of the date on which the inspection of the Bed Turner was completed, and the result of the inspection shall be recorded in the logbook together with the signature of the inspector.

A.5 If periodic inspection reveals any defects, wear or other damage that threatens the safety of the Bed Turner, the owner must be notified immediately. In the event of immediate danger to safety, the rental should be taken out of service immediately. It cannot then be used until the defect has been eliminated.

A.6 Defects and damage of significance to the safety of the Bed Turner that have occurred between inspections and have already led to corrective action must be entered in the logbook.

A.7 Defects and damage must be reported back to the manufacturer/dealer.
This feedback must be reported in the logbook.

Appendix B Instructions for daily inspection of the Bed Turner before use

No.	Check	Note
1	All parts are in place, not any loose parts.	
2	There are no defective electrical parts, actuators, wires.	
3	There are no abnormal noises from the actuators and control box.	
4	Bed turners do not have rust or surface damage.	
5	The bed turner does not show signs of other damage.	
6	Wheels and brake function at wheels.	
7	Check that screws and mounted parts are tightened, - this includes the Bed Turner as well as accessories, so that there is no unnatural play and large gaps.	

Daily cleaning.
Remove hair and dust from around the wheels
The bed turner is cleaned with a slightly damp cloth.

Elaboration:
The bed turner is cleaned with a cleaning or disinfectant, using a brush or sponge, which is subsequently showered or rinsed. Dry thoroughly after washing.

Solvents in highly concentrated form must not be used.

Do not use 100% chlorine solutions.

Bed turners do **not** tolerate autoclaving.

When cleaning wheels, they only use cleaning agents that do not contain corrosion-promoting and harmful substances.

⚠ Attention!
Never spray directly onto the product with a pressure washer.

⚠ Attention!
Cleaning with steam is not allowed.

⚠ Attention!
Not machine washable.

Appendix C Guidelines 12 months' inspection of the Bed Turner:

(Fill in/adapt yourself with additional controls as deemed relevant)

Nr.	Check	Note
1	**Visual inspection of product**	
2	Wear and tear	
3	Imbalances	
4	Damage in general	
5	incipient rust	
6	Stability No loose parts	
7	wheels drive easily and effortlessly	
8	wheel lock function	
9	Check attachment handles and grips for incipient rust, wear and fastening ability	
10	Check all screws and bolts for proper fastening	
11	Check that the hand control is working and is free of scratches, cracks or other damage	
12	Checking labelling	
	Lifting motor/ actuator	
13	Run the Bed Turner all the way up and make sure it stops	
14	Actuators/lifting motor must be replaced after 11,000 cycles or min every 5 years	
15	Control of all functions under normal use: (tested at max load, a full cycle. Should be able to be done without difficulty and without jarring noises):	

Appendix C guideline 12 months inspection.

	Electrical parts/connections:	
16	Check that all wires are intact	

17	Check that all wires are secured in such a way that they do not get pinched when using the bearing	
18	Check that the wires are free of cracks, also on the insulation	
19	Check that all electrical parts are provided with legible labels.	
20	Check control boxes are in good and suitable condition, with no damage that could affect safety	
20b	Check the battery and control boxes are in good and appropriate condition, with no damage that could affect safety	
	Other:	
21	Clean and lubricate as needed	
22	Attach sticky label with date of next inspection	

Date: _____ Initials/ signature: _____

Annual inspections can be registered electronically in the product's service log at Rehab-Care.dk. Contact Rehab-Care.dk for further information.

Annex D Dimensions

Dimensions drawing

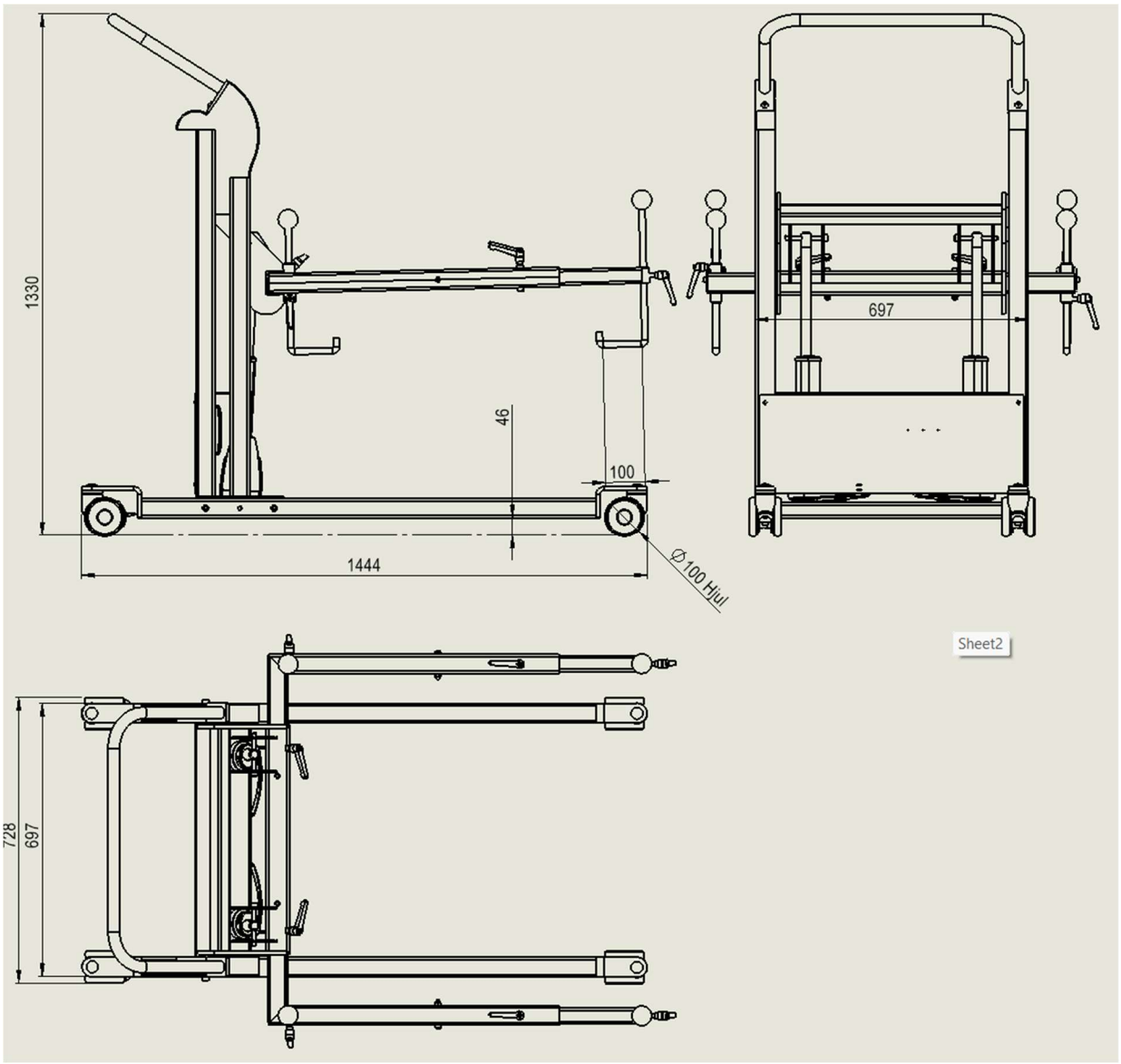

Reference: Drawing SV 400 rev. A

Annex E Spare parts list

ITEM NO.	PART NUMBER	Description	Default/ QTY.
1	SV14	Tårn til sengevender	1
2	SV10	Hjul til sengevender	4
3	SV4-400	Arm for sengevender	2
5	SV5	Udtræks arm	2
5	SV9	Krog for sengevender	4
6	Ganter greb M8		8
7	Kugle ø50-M10 sort	Kugle ø50/M10	4
8	5947UAP100P30-11	Tente wheel ø100 brake	2
9	5940UAP100P30-11	Tente wheel ø100	2
10	ISO 8677-M12x80-36-N		3
11	DIN 912 M10 x 70 --- 32N		4
12	DIN 912 M8 x 60 --- 28N		2
13	DIN 912 M8 x 70 --- 28N		2
14	DIN 1587 - M8 –NNU		4
15	SV15	Hjul ophæng	2
16	Popnite ø4,8x16		6
17	SV16	Håndtag for sengevender	1
18	SV3	Bom for sengevender	1
19	ISO 8677-M12x55-30-N		1
20	DIN 912 M10 x 100 --- 32N		4
21	SV1-7	Dækplade	1
22	la44-400-690	sl400-690	2
23	Top-LA40-250		2
24	ISO 7380 - M10 x 16 - 16N		2
25	CO71	Styreboks CO71	1

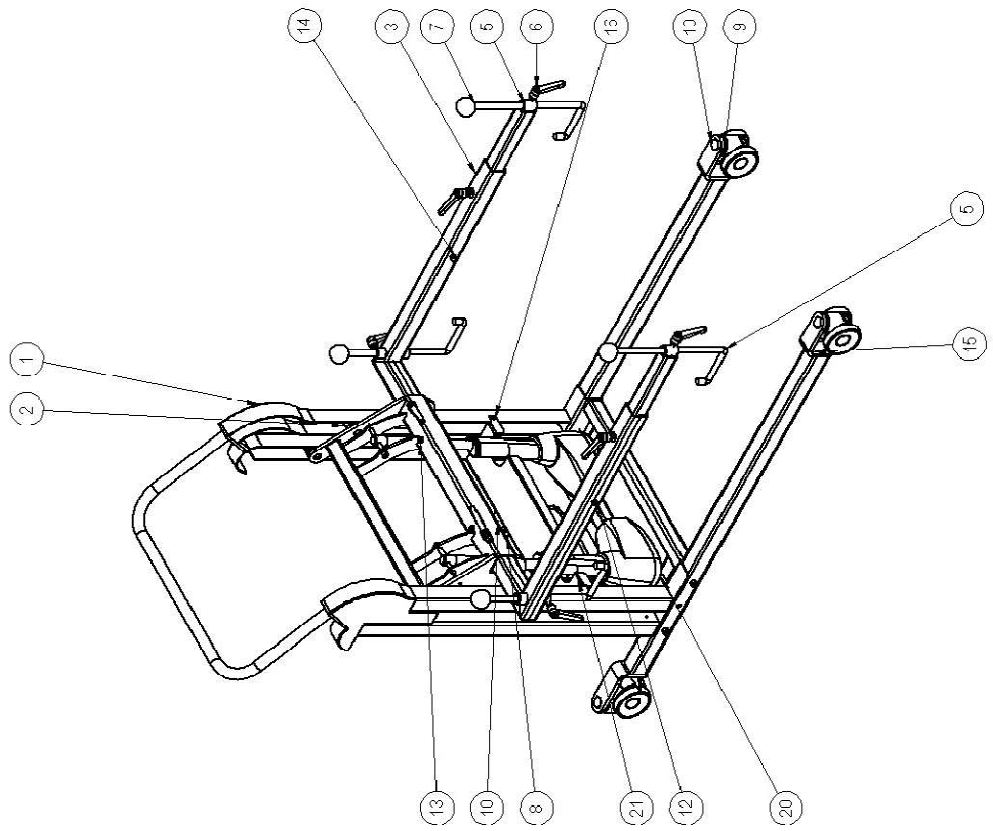

Rev	Date	Note
	28-01-13	Nyt setup og hjul

rehab-care.dk®
Sypresvej 3 - 7400-Herning Denmark/www.rehab-care.dk

Scae: 1:20
Paper: A3
Sheet 1 of 2

Description: Ergon Sengevender LA44

Surface treatment: Color:
Drawn By: MG Drawn Date:
Weight: 87229.64 State: - ok Material:
Tolerances ISO 2768-mK
Drawing No.: SV 400-la44
Rev.

Appendix F TROUBLESHOOTING.

If the product does not work, please check the following:

Nr.	Errors	Possible cause	Solution
1	Malfunction	Is the power outlet on?	Turn on the power outlet
2		Are all connectors pressed well to the bottom? (must be pressed hard)	Push hard to the bottom
3		Are there visible breaks in the wires?	Change the cord
4		battery	Charge battery

Contact your dealer if the Bed Turner is not working properly.

A defective bed turner must not be used.

SURCHARGE – BATTERY.

Bed Turner can be equipped with battery system.
Electrical components are approved according to standard 60601-1 on electrical medical devices.

Charging.
To ensure the longest possible life of the battery box, it must be charged before use.

Charging for the first time.
Before using the Bed turner for the first time, the battery is charged **for 24 hours**, to ensure that it is fully charged and to ensure the best possible battery life.

Charging afterwards.
Subsequently, the battery has a charging time of **4 hours**.

NOTE: When stored and stored for more than 3 months, the battery must be charged afterwards every 3 months.

NOTE: The batteries may be damaged if they are completely discharged between charges.

⚠ Attention! Do not use the bed turner while charging

⚠ Attention! Batteries must not be charged in wet rooms, bathrooms or similar

LINAK battery packs contain diluted sulphury acid, which is a toxic substance. If the battery's internal fluid leaks out and gets on the skin or clothing, make sure it is washed off with clean water. Also, if the liquid gets in your eyes, wash them with clean water immediately and seek medical attention. When diluted sulfuric acid gets into your eyes, it can cause loss of vision, and when it gets on your skin, it can cause a burn on your skin.

DO NOT use or store LINAK battery packs where the ambient temperature exceeds 50°C, such as inside a hot car, in direct sunlight, or in front of a wood-burning stove or a source of intense heat. This can shorten the life of the battery, impair its performance, cause the battery to leak liquid, become damaged, or deformed.

Battery Maintenance
Batteries must be replaced after 4 years at the latest. Maybe earlier, depending on the usage pattern. Frequent use and heavy discharge decrease battery life. For an optimal service life of the product, connect the battery as often as possible for charging via the cable facilitated. The batteries must be charged at least every 3 months - otherwise they will be damaged due to self-discharge. It is recommended to test the battery function at least once a year.

Before mounting, ensure that the battery is connected correctly, compare with the drawing in the battery compartment, and check that no connectors are loose.

When replacing batteries with waterproof products (IPX5 and IPX6), it must be ensured that the sealing material (silicone ring or sealant) is not damaged and that it is correctly positioned in the

groove. Then attach the screws to the cover with approx. 1 Nm. If the seal is damaged, it must be replaced with a new silicone string

If the product has been subjected to mechanical overload (dropped on the floor, collision/crush or forceful impact) the product should be sent to an authorized workshop for hermetic separation check between the battery and electronics rooms.

CO71 with battery backup
The CO71 with battery backup has an audible alarm that sounds when the batteries need charging and is at approx. 17-18V. To charge the batteries of a BAT-22 with internal batteries, simply connect to the mains. With external batteries, external batteries are connected to an external charger.